SENCO®

SENCO
CATALOGUE

FIRST EDITION

Marketed and distributed by AIRCO® BRANDS

Table of Contents

Introduction

History of Airco 3

Senco Tools

Framing Nailers 4
Coil Nailers 5-6
Finishing Nailers 7-10
Brad Nailers 11-12
Q Series Staplers 13
Flooring Stapler 14
Crown Staplers 15-16
L Series Staplers 17
Corrugated Fastening Tools 18
Fusion Brad Nailers 19-22
Auto-Feed Screwdrivers 23-24

All content was correct at the time of printing and is subject to change. Printed 2019. © Copyright Airco Brands 2019

Airco is a trusted name in fastening, with a reputation built on providing quality nails, screws, rivets, nuts and bolts, staples, and tools suited to DIY and Trade. It is one of a stable of trusted trade-quality brands, proudly owned and marketed by Airco Brands.

Airco Brands is an Australian family-owned company with a proud legacy of three generations leading and managing the business. Airco Brands has provided quality tools and fasteners to the construction, manufacturing, retail and rural markets for over 20 years and is one of the largest diversified fastener companies in Australia and New Zealand, boasting six distribution centres nationally. The Airco Brands portfolio includes SENCO, Otter, COLT, Interbath, Titan, National, Aerofast, and Cobra all of which are synonymous with quality reliability and service.

The combined offer of Airco Brands will give you the range, strength, and performance you require, no matter the task at hand.

It is Airco Brands' vision 'To be the business partner, customer, and employer of choice' and we are continually striving to improve our offering and to ensure an exceptional customer experience for our valued customers.

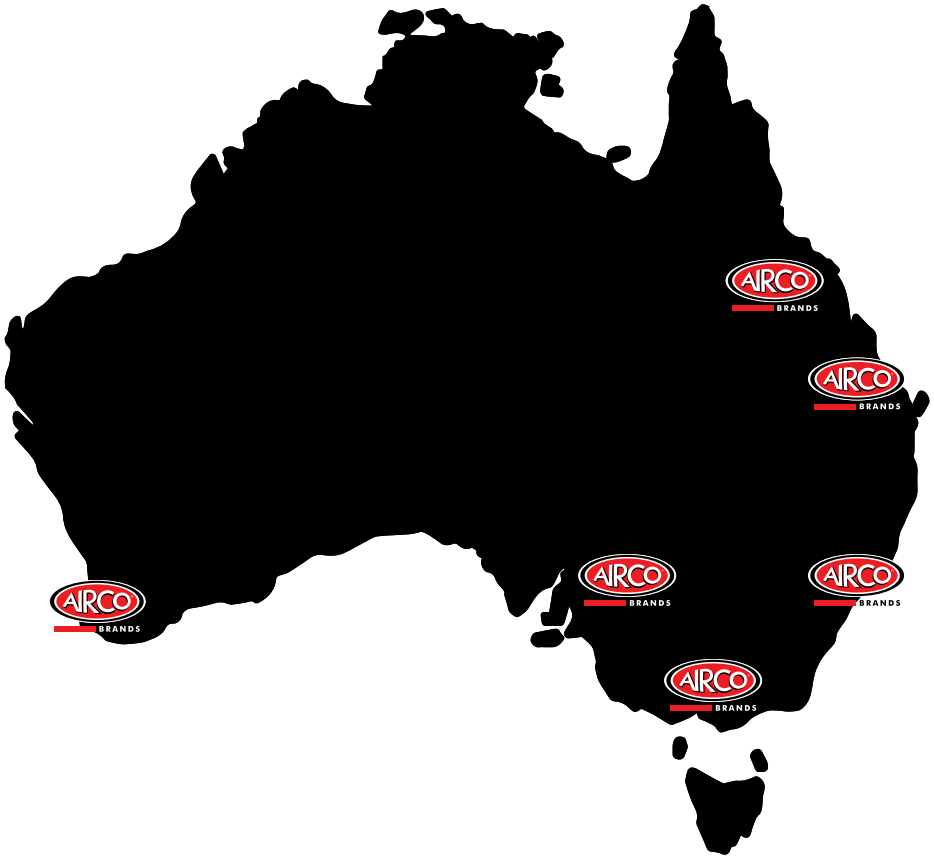

If there is anything you would like to discuss, please call our attentive customer service team toll free on 1300 365 800, +61 3 8787 2900 for international callers or email sales@aircobrands.com.au.

SN751XP

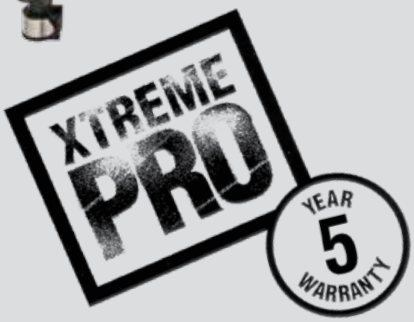

50mm–90mm Clipped head framing nails

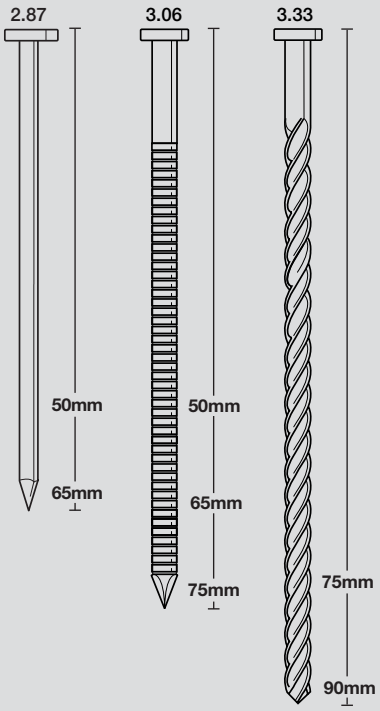

FRAMING NAILER

34°

SENCO XTREMEPRO™ FRAMING NAILER

SUITS 50-90mm clipped head framing nails

FEATURES

- Single-shot Trigger ensures operator safety and provides precision fastener placement.
- Dimpled grip is ergonomically designed for better productivity and less fatigue
- Aggressive toenail safety teeth grip bite into timber to prevent movement, also includes No-mar pad
- Adjustable depth-of-drive installs nails to a consistent and controllable depth
- In line fastener magazine includes ruler and reload indicator to alert user when it's time to reload

PRODUCT REFERENCE CHART

TOOL SPECS	SN751XP
Trigger	Restrictive
Length	381mm
Height	362mm
Width	106mm body
Weight	3.8kg
Air inlet	3/8" NPT
Operating Pressure	70-120psi
Air consumption (at 60 shots per minute)	311 l/m
NeverLube® technology?	No
Magazine capacity	70 nails
Warranty	5 years
FASTENER SPECS	
Type	Clipped head framing nails
Shank types	Smooth, Screw, Ring
Diameter	2.87, 3.06 & 3.33
Length	50, 65, 75 & 90mm
Angle/Collation	34° paper collated strip
Shank	Smooth -
	Screw -
	Ring -
APPLICATIONS	
	Framing, trusses/roofing, joists/flooring, structural ply, decking, wood-to-green concrete, crate and box assembly, heavy-duty pallets and fencing.
BARCODE	741474307980

7 41474 30798 0

COIL NAILER

15°

SENCO XTREMEPRO™ 15° WIRE AND PLASTIC COIL NAILER

SUITS 32mm–65mm round head coil nails and 50mm dome head coil nails

SCN49XP

FEATURES

- Well balanced and lightweight magnesium body
- Selectable trigger to quickly select the mode of operation between bump fire and sequential
- Dual collation allows the choice between wire or plastic collation
- Adjustable depth-of-drive for consistent and controllable drive
- Huge fastener range to tackle numerous applications

PRODUCT REFERENCE CHART

TOOL SPECS	SCN49XP
Trigger	Bump fire and sequential modes
Length	314mm
Height	304mm
Width	132mm
Weight	2.3kg
Air inlet	3/8" NPT
Operating Pressure	70-120psi
Air consumption (at 60 shots per minute)	111 l/m
NeverLube® technology?	No
Magazine capacity	250-375 nails
Warranty	5 years
FASTENER SPECS	
Type	Round & dome head coil nails
Shank types	Smooth, Screw, Ring
Diameter	2.1, 2.3, 2.5, 2.7 & 2.9mm
Length	32-65mm
Angle/Collation	15° wire/plastic collated coil
Shank	Smooth -
	Screw -
	Ring -
APPLICATIONS	
	Siding (including fibre cement), decking, exterior trim, fencing, subflooring, wood shingles, crate and box assembly, floor sheathing and more.
BARCODE	741474060533

32mm–65mm round head coil nails and 50mm dome head coil nails

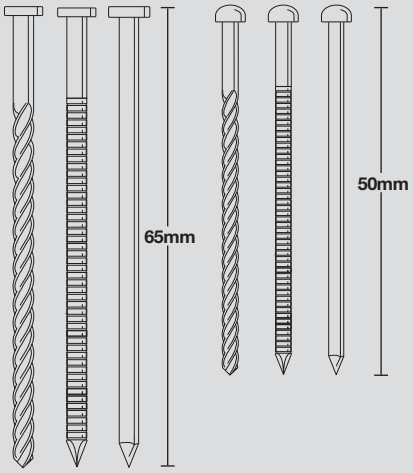

7 41474 06053 3

SCN58A

COIL NAILER

15°

SENCO PROSERIES™ 15° WIRE AND PLASTIC COIL NAILER

SUITS 32mm–65mm Round head coil nails and dome head coil nails

32mm–65mm wire and plastic collated coil nails

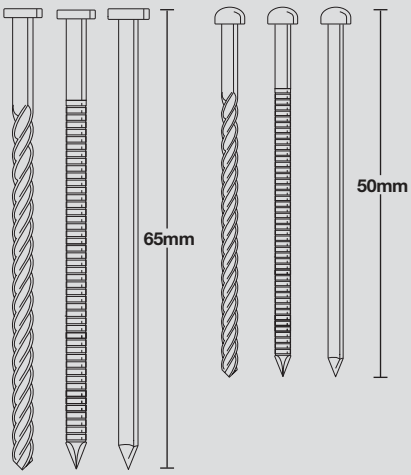

FEATURES

- Selectable trigger to quickly select the mode of operation between bump fire and sequential
- Simple depth-of-drive adjustment
- Ergonomic soft grip handle for comfort even during extended use
- Drives both wire and plastic sheet collated nails
- High volume, clear canister to see how many nails are left

PRODUCT REFERENCE CHART

TOOL SPECS	SCN58A
Trigger	Bump fire and sequential modes
Length	300mm
Height	310mm
Width	89mm body/130mm magazine
Weight	2.6kg
Air inlet	3/8" NPT
Operating Pressure	70-120psi
Air consumption (at 60 shots per minute)	113 l/m
NeverLube® technology?	No
Magazine capacity	200-350 nails
Warranty	1 year
FASTENER SPECS	
Type	Coil nails
Shank types	Smooth, Screw, Ring
Diameter	2.2-2.65mm
Length	32-65mm
Angle/Collation	15° wire/plastic collated coil
Shank	Smooth -
	Screw -
	Ring -
APPLICATIONS	
	Siding (including fibre cement), decking, exterior trim, fencing, subflooring, wood shingles, crate and box assembly, floor sheathing and more.
BARCODE	741474308840

7 41474 30884 0

FINISHING NAILER

34°

SENCO XTREMEPRO™ DA SERIES FINISHING NAILER

SUITS 32mm - 65mm DA brad head finish nails

FEATURES

- Rugged internal engine design and lightweight magnesium housing ensures comfort and performance
- Over-moulded grip is ergonomically designed for less fatigue and less slippage
- Loaded with features such as a thumb wheel adjustable depth-of-drive and EZ-Clear™ latch to clear jams fast
- NeverLube® technology means no lubrication is required
- Two No-Mar pads with on-tool storage to protect work materials

PRODUCT REFERENCE CHART

TOOL SPECS	FIP42XP
Trigger	Bump or restrictive
Length	330mm
Height	292mm
Width	89mm
Weight	2.1kg
Air inlet	1/4" NPT
Operating Pressure	70-120psi
Air consumption (at 60 shots per minute)	133 l/m
NeverLube® technology?	Yes
Magazine capacity	104 nails
Warranty	5 years
FASTENER SPECS	
Type	DA brad head finish nails
Shank types	Smooth
Diameter	15 gauge (1.8mm diameter)
Length	32-65mm
Angle/Collation	34° mylar taped strip
APPLICATIONS	
	Baseboards, cabinets, case goods, caskets, chair rails, decorative trim, door & window casing, sash & millwork, exterior trim, finish applications/trim, furniture and panelling.
BARCODE	741474602801

7 41474 60280 1

FIP42XP

XTREME PRO 5 YEAR WARRANTY

32mm - 65mm DA brad head finish nails

FIP35MG

32mm - 65mm DA brad head finish nails

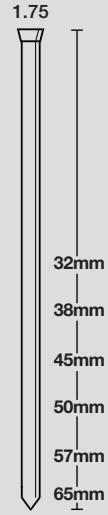

FINISHING NAILER

34°

SENCO FINISHPRO™ FINISHING NAILER

SUITS 32mm - 65mm DA brad head finish nails

FEATURES

- Magnesium body provides a durable and ultralight tool for comfortable extended use
- Ergonomic comfort grip reduces fatigue during extended use
- Selectable trigger to quickly select the mode of operation between bump fire and sequential
- Oil-free motor eliminates oil carryover onto the work surface
- Push-button air blower can dust-off excess dust and debris from the work surface
- No-Mar pad protects work surface
- Adjustable belt hook

PRODUCT REFERENCE CHART

TOOL SPECS	FIP35MG
Trigger	Bump or restrictive
Length	330mm
Height	311mm
Width	88.9mm
Weight	2.1kg
Air inlet	1/4" NPT
Operating Pressure	70-120psi
Air consumption (at 60 shots per minute)	90 l/m
NeverLube® technology?	Yes
Magazine capacity	110 nails
Warranty	1 year
FASTENER SPECS	
Type	DA brad head finish nails
Shank types	Smooth
Diameter	15 gauge (1.8mm diameter)
Length	32-65mm
Angle/Collation	34° paper mylar taped strip
APPLICATIONS	
	Baseboards, cabinets, case goods, caskets, chair rails, decorative trim, door & window casing, sash & millwork, exterior trim, finish applications/trim, furniture and panelling.
BARCODE	7414741171142
Kit Contains	Heavy-duty plastic case, fitting and oil

7 414741 171142

FINISHING NAILER

34°

SENCO XTREMEPRO™ DA SERIES FINISHING NAILER

SUITS 32mm - 50mm DA brad head finish nails

FIP30XP

XTREME PRO 5 YEAR WARRANTY

32mm - 50mm DA brad head finish nails

FEATURES

- Lightweight with ergonomically designed comfort grip handle and double belt hooks
- NeverLube® technology means no lubrication is required
- No-Mar pad to protect the work surface from damage
- Adjustable depth-of-drive thumb wheel for perfect height accuracy
- Innovative EZ-Clear™ latch to fix jams fast

PRODUCT REFERENCE CHART

TOOL SPECS	FIP30XP
Trigger	Dual action or restrictive
Length	305mm
Height	244mm
Width	83mm
Weight	1.6kg
Air inlet	1/4" NPT
Operating Pressure	70-120psi
Air consumption (at 60 shots per minute)	61 l/m
NeverLube® technology?	Yes
Magazine capacity	104 nails
Warranty	5 year
FASTENER SPECS	
Type	DA brad head finish nails
Shank types	Smooth
Diameter	15 gauge (1.75mm)
Length	32-50mm
Angle/Collation	34° taped strip nails
Series	Mylar
APPLICATIONS	
	Baseboards, cabinets, case goods, caskets, chair rails, decorative trim, door & window casing, sash & millwork, exterior trim, finish applications/trim, furniture and panelling.
BARCODE	7414741467184

7 414741 467184

FIP16XP

C Brad series 32mm - 65mm

FINISHING NAILER

SENCO XTREMEPRO™ C SERIES BRAD NAILER

SUITS C Brad series 32mm - 65mm

FEATURES

- EZ-Clear™ latch design allows for quick and easy jam clearing
- Upgraded magazine feed system provides consistent and reliable fastener delivery
- Selectable trigger to quickly select the mode of operation between bump fire and sequential
- Tool-free depth-of-drive adjustment
- Senco XP trade dress with high contrast cast-in logo
- Push button integrated air duster
- Rotatable belt hook
- 5 year limited warranty

PRODUCT REFERENCE CHART

TOOL SPECS	FIP16XP
Trigger	Bump or restrictive
Length	305mm
Height	290mm
Width	102mm
Weight	1.8kg
Air inlet	1/4" NPT
Operating Pressure	70-120psi
Air consumption (at 60 shots per minute)	63 l/m
NeverLube® technology?	No
Magazine capacity	110 nails
Warranty	5 year
FASTENER SPECS	
Type	C Series Brad
Shank types	Smooth
Diameter	16 gauge (1.65mm)
Length	32-65mm
Angle/Collation	Straight glued strip
APPLICATIONS	
	Baseboards, cabinets, case goods, caskets, chair rails, decorative trim, door & window casing, sash & millwork, exterior trim, finish applications/trim, furniture and panelling.
BARCODE	741474148248

7 41474 14824 8

BRAD NAILER

SENCO PROSERIES™ C1 SERIES BRAD NAILER

SUITS C1 Brad series 16mm - 50mm

FIP18

FEATURES

- Magnesium body with hardened steel driver for extended tool life
- Comfort grip paired with a selectable trigger make for pleasant working
- Adjustable depth of drive installs nails to a consistent depth
- The low load indicator is a visual alert that more brads are required
- No-Mar pad and rear bumper to protect work surfaces

PRODUCT REFERENCE CHART

TOOL SPECS	FIP18
Trigger	Bump or restrictive
Length	267mm
Height	248mm
Width	63.5mm
Weight	1.12kg
Air inlet	1/4" NPT
Operating Pressure	70-120psi
Air consumption (at 60 shots per minute)	68 l/m
NeverLube® technology?	Yes
Magazine capacity	110 nails
Warranty	1 year
FASTENER SPECS	
Type	Slight-head and medium head
Shank types	Smooth
Diameter	18 gauge (1.25mm)
Length	16-50mm
Angle/Collation	Straight glued strip
APPLICATIONS	
	Baseboards, cabinets, case goods, caskets, chair rails, decorative trim, door & window casing, sash & millwork, exterior trim, finish applications/trim, furniture and panelling.
BARCODE	741474062650
Kit Contains	Heavy-duty plastic case

PRO SERIES
YEAR 1 WARRANTY

C1 Series brads

7 41474 06265 0

SLP20XP

16mm - 40mm Slight head and medium head brad finishing nails

BRAD NAILER

SENCO XTREMEPRO™ AY SERIES SLIGHT BRAD NAILER

SUITS 16mm - 40mm Slight head and medium head brad finishing nails

FEATURES

- Drives a wide range of both slight-headed and medium-headed brads to give you two tools in one
- Weighs only 1kg – the lightest weight available in a brad nailer – for easy handling and manoeuvring in small places
- Oil-free design means easier maintenance and no lubrication to stain surfaces
- Reduces fatigue throughout comfort-grip handle and the best balance and lowest recoil in the industry
- With up to 40% more power than comparable tools, it is suitable for use on hardwood, plastics, and particleboard

PRODUCT REFERENCE CHART

TOOL SPECS	SLP20XP
Trigger	Restrictive
Length	241mm
Height	210mm
Width	50mm
Weight	1kg
Air inlet	1/4" NPT
Operating Pressure	70-120psi
Air consumption (at 60 shots per minute)	53 l/m
NeverLube® technology?	Yes
Magazine capacity	110 nails
Warranty	5 years
FASTENER SPECS	
Type	Brads
Shank types	Smooth
Diameter	18 gauge (1.25mm)
Length	16-40mm
Angle/Collation	Straight glued strip
APPLICATIONS	
	Vanities, mouldings and trim, dowels and joints, cabinet door frame, drawer assembly, picture frames, window beading, finishing carpentry, birdhouses and craft projects.
BARCODE	741474057779
Kit Contains	Heavy-duty plastic case

7 41474 05777 9

Q SERIES STAPLER

SENCO XTREMEPRO™ RUGGED DUTY Q SERIES STAPLER

SUITS 38mm - 65mm Heavy wire staples

SQS55XP

FEATURES

- Amazing power, yet lightweight and balanced
- Delivers up to 15 staples per second
- Rugged dependability and designed even for hard woods and laminates
- Innovative EZ-Clear™ latch to fix jams fast
- Adjustable depth-of-drive control for proper staple set

PRODUCT REFERENCE CHART

TOOL SPECS	SQS55XP
Trigger	Bump fire or restrictive
Length	365mm
Height	305mm
Width	92mm
Weight	2.7kg
Air inlet	3/8" NPT
Operating Pressure	70-120psi
Air consumption (at 60 shots per minute)	185 l/m
NeverLube® technology?	No
Magazine capacity	130 staples
Warranty	5 years
FASTENER SPECS	
Type	Q staple
Shank types	Smooth
Diameter	15 gauge (1.8mm diameter)
Length	38-65mm
Angle/Collation	Straight glued strip
APPLICATIONS	
	Framing, furniture frames, furring, sidewall sheathing, subflooring, window units, crate and box assembly, boxes, crates, pallets and pallet repair.
BARCODE	741474058271

38mm - 65mm Heavy wire staples

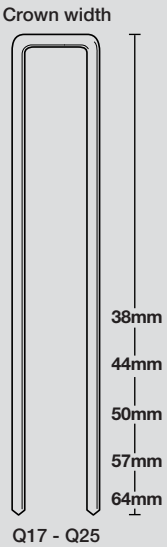

7 41474 05827 1

FLOORPRO (1)

25mm - 50mm Flooring staples

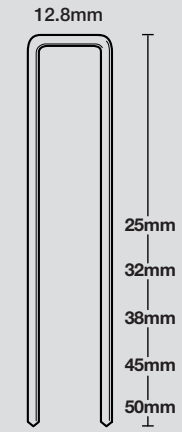

M004040 - M004044

FLOORING STAPLER

SENCO FLOORPRO FLOORING STAPLER

SUITS 25mm - 50mm Flooring staples

FEATURES

- Simple and easy to use
- Ergonomic design to reduce back fatigue
- Long reach aluminium handle for portability
- Durable, heavy-duty construction
- Includes a mallet, so there is no need for additional tools

PRODUCT REFERENCE CHART

TOOL SPECS	FLOORPRO (1)
Trigger	Mallet actuated
Length	-
Height	-
Width	-
Weight	-
Air inlet	-
Operating Pressure	70-120psi
Air consumption (at 60 shots per minute)	-
NeverLube® technology?	-
Magazine capacity	80 Staples
Warranty	1 year
FASTENER SPECS	
Type	Flooring staples
Shank types	Smooth
Diameter	15 gauge (1.8mm diameter)
Length	25-50mm
Angle/Collation	Straight glued strip
APPLICATIONS	
	Hardwood flooring. For concealed fastening of tongue and groove flooring.
BARCODE	9331371066236
Kit Contains	Heavy-duty plastic case

9 331371 066236

CROWN STAPLER

SENCO XTREMEPRO™ 1" WIDE CROWN STAPLER

SUITS 13mm - 32mm wide crown staples

PS15XP

FEATURES

- Robust firing valve design makes the tool fast, powerful, efficient, and easy to maintain
- Positive-locking adjustable depth of drive ensures consistently flush drives and helps prevent over-drives
- Aggressively tapered body allows for an improved line of sight for better shot accuracy
- High-strength composite magazine and metal magazine guide prevents wear and helps eliminate skipping, jams and misfires
- Innovative EZ-Clear™ latch to fix jams fast

PRODUCT REFERENCE CHART

TOOL SPECS	PS15XP
Trigger	Restrictive or bump
Length	387mm
Height	225mm
Width	89mm
Weight	2.3kg
Air inlet	3/8" NPT
Operating Pressure	70-120psi
Air consumption (at 60 shots per minute)	90 l/m
NeverLube® technology?	No
Magazine capacity	160 staples
Warranty	5 years
FASTENER SPECS	
Type	Wide crown P staples
Shank types	Smooth
Diameter	16 gauge (1.6mm)
Length	13-38mm
Angle/Collation	Straight glued strip
APPLICATIONS	
	Wire lathing, corrugated carton to skid, butt-joints and furniture/cabinet frames, foam insulation board and trusses.
BARCODE	7414741482620

13mm - 32mm Wide crown staples

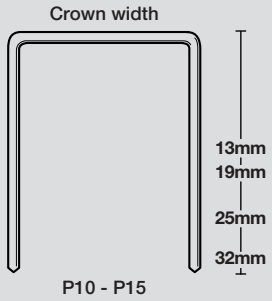

7 414741 482620

NS20XP

CROWN STAPLER

SENCO XTREMEPRO™ HEAVY WIRE STAPLER

SUITS 25mm - 50mm length crown staples

- 15% more powerful than all other construction staplers in its class.
- Aggresive locking feature provides superior holding power for complete control of the fastener, offering pinpoint accuracy and unrivaled driveability.
- New Drive track design eliminates movement of the staple virtually eliminating fastener jams, skipping and misfires.
- Rotatable belt hook

XTREME PRO 5 YEAR WARRANTY

25-50mm N series staples

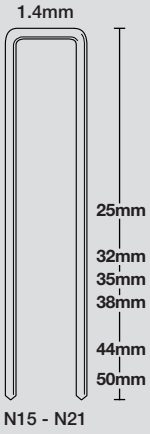

PRODUCT REFERENCE CHART

TOOL SPECS	NS20XP
Trigger	Bump or restrictive
Length	381mm
Height	279mm
Width	89mm
Weight	2.3kg
Air inlet	3/8" NPT
Operating Pressure	70-120psi
Air consumption (at 60 shots per minute)	3.5 scfm
NeverLube® technology?	No
Magazine capacity	160 staples
Warranty	5 years
FASTENER SPECS	
Type	16Ga wire 11.1mm crown N series
Shank types	Smooth
Diameter	16-17 gauge (1.6mm)
Length	25-50mm
Angle/Collation	Straight glued strip
APPLICATIONS	
	Sheathing, furniture framing, roof decking, subflooring, crate and box assembly, pallets, cedar shingles, furring, fascia and soffits and ridge beam assembly.
BARCODE	741474148309

7 41474 14830 9

L SERIES STAPLER

SENCO XTREMEPRO™ L SERIES STAPLER

SUITS 16mm - 38mm Narrow and medium crown staples

SLS20XP-L

FEATURES

- Lightweight for ease of handling, especially over extended periods
- Ergonomically designed with a comfort-grip handle to reduce fatigue
- Adjustable depth-of-drive for precise staple setting
- Fewer moving parts and oil-free design means easier maintenance and no lubrication to stain surfaces
- No-mar pad keeps work surfaces free of marks

PRODUCT REFERENCE CHART

TOOL SPECS	SLS20XP-L
Trigger	Bump or restrictive
Length	305mm
Height	216mm
Width	51mm
Weight	1.1kg
Air inlet	1/4" NPT
Operating Pressure	70-120psi
Air consumption (at 60 shots per minute)	54 l/m
NeverLube® technology?	Yes
Magazine capacity	168 staples
Warranty	5 years
FASTENER SPECS	
Type	L staples
Shank types	Smooth
Diameter	18 gauge (1.25mm)
Length	16-38mm
Angle/Collation	Straight glued strip
APPLICATIONS	
	Assembling drawers, lattice work, cabinet frame assembly, cabinet backs, hardboard underlay, panelling, window beating, glue blocks, light timber boxes, shoe heel assembly, general woodworking and moulding/trim.
BARCODE	741474057793
Kit Contains	Heavy-duty plastic case

16mm - 38mm Narrow crown staples

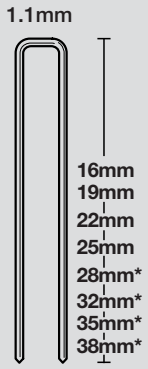

L10 - L17

7 41474 05779 3

SC15

YEAR 1 WARRANTY

9mm - 15mm Corrugated fasteners

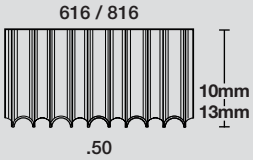

CORRUGATED FASTENING TOOL

SENCO CORRUGATED FASTENING TOOL

SUITS 9mm - 15mm Corrugated fasteners

FEATURES

- Added strength for larger butt joints
- Powerful for hard and dense material
- Eliminate gluing, milling, doweling, screwing and clamping
- Senco corrugated fasteners provide twice the joint strength of ordinary fasteners

PRODUCT REFERENCE CHART

TOOL SPECS	SC15
Trigger	Contact and sequential
Length	300mm
Height	282mm
Width	82mm
Weight	2.41kg
Air inlet	1/4" Male NPT
Operating Pressure	70-120psi
Air consumption (at 60 shots per minute)	99 l/m
NeverLube® technology?	No
Magazine capacity	73 staples
Warranty	1 year
FASTENER SPECS	
Type	Corrugated fasteners
Shank types	Smooth
Diameter	.50mm
Length	9-15mm
Angle/Collation	Straight glued strip
APPLICATIONS	
	But-joins in cabinet/furniture frames, door/window sash, millwork, truss construction, picture/mirror frames, wooden boxes, pallet stringer repair and trusses.
BARCODE	7414741193090

7 414741 193090

BRAD NAILER

SENCO FUSION™ DA SERIES BRAD NAILER

SUITS DA Series brad nails

FN65DA

FEATURES

- Patented reflex-shot design for instant trigger response
- Robust aluminium drive cylinder and magazine are both lightweight and strong
- Adjustable depth-of-drive thumb wheel for perfect height accuracy
- The eco-friendly 18v Li-ion battery with charge indicator is both powerful and consistent
- Nose-mounted LED light to illuminate work surfaces
- Removable magazine for nail jams

PRODUCT REFERENCE CHART

TOOL SPECS	FN65DA
Trigger	Bump or restrictive
Length	330mm
Height	330mm
Width	76mm
Weight	2.8kg
Air inlet	-
Operating Pressure	-
Air consumption (at 60 shots per minute)	-
NeverLube® technology?	No
Battery	18V Li-ion - 1.5 AMP
Charging	100% 45 min.
Magazine capacity	110 nails
Warranty	2 years on tool. 1 year battery/charger
FASTENER SPECS	
Type	DA
Shank types	Smooth
Diameter	15 gauge (1.8mm diameter)
Length	32mm - 65mm
Angle/Collation	34° angled tape strip
APPLICATIONS	
	Baseboards, cabinets, case goods, caskets, chair rails, decorative trim, door & window casing, sash & millwork, exterior trim, finish applications/trim, furniture and panelling.
BARCODE	741474119026
Kit Contains	2x 18V Li-Ion batteries with fuel gauge, charger and case

DA Series 32mm -65mm brad nails

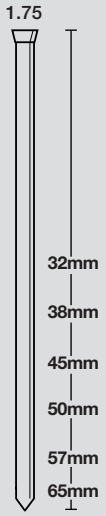

7 41474 11902 6

FN65RHA

BRAD NAILER

SENCO FUSION™ RH SERIES ANGLED BRAD NAILER

SUITS RH Series 32mm - 64mm angled brad nails

FEATURES

- Patented design instant trigger response and selectable drive switch for contact or sequential actuation
- Robust aluminium drive cylinder and magazine are both lightweight and strong
- The eco-friendly 18v Li-ion battery with charge indicator is both powerful and consistent
- Thumb wheel depth of drive for perfect countersinks
- Innovative features like EZ-Clear™ latch to fix jams fast and a nose-mounted LED light to illuminate work surfaces
- Removable magazine for nail jams

PRODUCT REFERENCE CHART

TOOL SPECS	FN65RHA
Trigger	Bump or restrictive
Length	330mm
Height	330mm
Width	76mm
Weight	2.8kg
Air inlet	-
Operating Pressure	-
Air consumption (at 60 shots per minute)	-
NeverLube® technology?	No
Battery	18V Li-ion - 1.5 AMP
Charging	100% 45 min.
Magazine capacity	100 nails
Warranty	2 years on tool. 1 year battery/charger
FASTENER SPECS	
Type	RH angled brad nails
Shank types	Smooth
Diameter	16 gauge (1.6mm)
Length	32-64mm
Angle/Collation	20° angled glued strip
APPLICATIONS	
	Baseboards, cabinets, case goods, caskets, chair rails, decorative trim, door & window casing, sash & millwork, exterior trim, finish applications/trim, furniture and panelling.
BARCODE	741474119057
Kit Contains	2 x 18V Li-Ion batteries, charger and case

RH Series 32mm - 64mm angled brad nails

7 41474 11905 7

BRAD NAILER

SENCO FUSION™ RH SERIES STRAIGHT BRAD NAILER

SUITS C Series 32mm - 64mm straight brad nails

FN65RHS

FEATURES

- Patented design instant trigger response and selectable drive switch for contact or sequential actuation
- Robust aluminium drive cylinder and magazine are both lightweight and strong
- The eco-friendly 18v Li-ion battery with charge indicator is both powerful and consistent
- Thumb wheel depth of drive for perfect countersinks
- Innovative features like EZ-Clear™ latch to fix jams fast and a nose-mounted LED light to illuminate work surfaces

PRODUCT REFERENCE CHART

TOOL SPECS	FN65RHS
Trigger	Bump or restrictive
Length	330mm
Height	276mm
Width	76mm
Weight	2.7kg
Air inlet	-
Operating Pressure	-
Air consumption (at 60 shots per minute)	-
NeverLube® technology?	No
Battery	18V Li-ion - 1.5 AMP
Charging	100% 45 min.
Magazine capacity	100 nails
Warranty	2 years on tool. 1 year battery/charger
FASTENER SPECS	
Type	C series brad nails
Shank types	Smooth
Diameter	16 gauge (1.6mm)
Length	32-65mm
Angle/Collation	Straight glued strip
APPLICATIONS	
	Baseboards, cabinets, case goods, caskets, chair rails, decorative trim, door & window casing, sash & millwork, exterior trim, finish applications/trim, furniture and panelling.
BARCODE	741474129827
Kit Contains	2 x 18V Li-Ion batteries, charger and case

C Series 32mm - 64mm straight brad nails

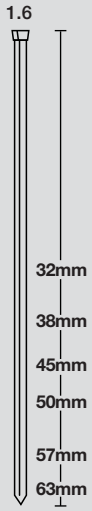

7 41474 12982 7

FN55AX

C1 Series 16mm - 56mm straight brad nails

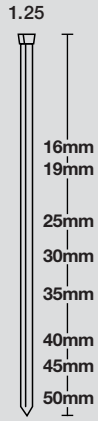

BRAD NAILER

SENCO FUSION™ C1 SERIES STRAIGHT BRAD NAILER

SUITS C1 Series straight brad nails

FEATURES

- Patented reflex-shot design for instant trigger response
- Robust aluminium drive cylinder and rugged carbon fibre magazine increase resistance to damage
- The eco-friendly 18v Li-ion battery with charge indicator is both powerful and consistent
- Control and situation with selectable drive switch and thumb wheel depth-of-drive
- Nose-mounted LED light to illuminate work surfaces

PRODUCT REFERENCE CHART

TOOL SPECS	FN55AX
Trigger	Bump or restrictive
Length	330mm
Height	276mm
Width	76mm
Weight	2.7kg
Air inlet	-
Operating Pressure	-
Air consumption (at 60 shots per minute)	-
NeverLube® technology?	No
Battery	18V Li-ion - 1.5 AMP
Charging	100% 45 min.
Magazine capacity	110 nails
Warranty	2 years on tool. 1 year battery/charger
FASTENER SPECS	
Type	C1 series straight brad nails
Shank types	Smooth
Diameter	18 gauge (1.25mm)
Length	16-56mm
Angle/Collation	Straight glued strip
APPLICATIONS	
	Moulding and decorative trim, furniture trim, window beading, blind pinning of upholstered and trim panels, rattan, scribe moulding, cabinets, drawers and picture frame assembly.
BARCODE	741474119095
Kit Contains	2 x 18V Li-Ion batteries, charger and case

7 41474 11909 5

AUTO-FEED SCREWDRIVER

SENCO DURASPIN® 18V AUTO-FEED SCREWDRIVER

SUITS 25mm - 50mm Collated screws

DS215-18Li

FEATURES

- 5,000 RPM high-speed motor is especially designed for drywall applications
- Corner-fit indexing technology that eliminates the screw placement challenges of auto-feed screw guns
- Load quickly and prevent mis-feeds with the patented EZ Load screw strip guide
- Variable-speed trigger allows user to regulate RPM depending on application
- Features such a ergonomically designed handle, second manual grip and belt hook add to user comfort

PRODUCT REFERENCE CHART

TOOL SPECS	DS215-18Li
Trigger	Variable speed
Length	381mm
Height	241mm
Width	99mm
Weight	2.4kg
Air inlet	-
Operating Pressure	-
Air consumption (at 60 shots per minute)	-
NeverLube® technology?	No
Battery	18V Li-ion - 3 AMP
Charging	100% in 60min.
Magazine capacity	50 screws
Warranty	1 year
FASTENER SPECS	
Type	Collated Screws
Shank types	Screws
Diameter	6-8 gauge & 10 gauge
Length	25-50mm
Angle/Collation	Plastic collation
APPLICATIONS	
	Drywall, Sheathing, Cement Board, Underlayment, Sub-flooring
BARCODE	741474096037
Kit Contains	2x 18V 3Ah Li-Ion batteries, charger, drywall nosepiece, wood nosepiece, storage bag & PH drive bit.

25mm - 50mm Collated screws

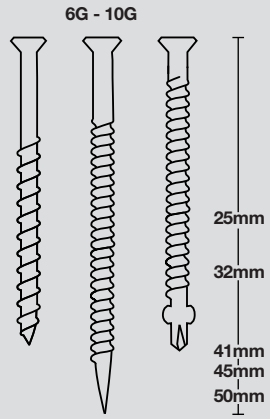

7 41474 09603 7

DS312-18Li

AUTO-FEED SCREWDRIVER

SENCO DURASPIN® 18V AUTO-FEED SCREWDRIVER

SUITS 25mm - 75mm Collated screws

FEATURES

- Tool-free adjustable nose piece, adjustable depth drive and quick-slide bit release make for easy setting
- Corner-fit indexing technology eliminates the screw placement challenges of auto-feed screw guns
- Load quickly and prevent mis-feeds with the patented EZ Load screw strip guide
- Variable-speed trigger allows user to regulate RPM depending on application
- Features such a ergonomically designed handle, second manual grip and belt hook add to user comfort

PRODUCT REFERENCE CHART

TOOL SPECS	DS312-18Li
Trigger	Variable speed
Length	416mm
Height	241mm
Width	99mm
Weight	2.7kg
Air inlet	-
Operating Pressure	-
Air consumption (at 60 shots per minute)	-
NeverLube® technology?	No
Battery	18V Li-ion - 3 AMP
Charging	100% in 60min.
Magazine capacity	50 screws
Warranty	1 year
FASTENER SPECS	
Type	Collated Screws
Shank types	Screws
Diameter	6-10 Gauge
Length	25-75mm
Angle/Collation	Plastic collation
APPLICATIONS	
	Drywall, Sheathing, Decking, Cement Board, Underlayment, Sub-flooring, Rigid Foam Insulation
BARCODE	741474096051
Kit Contains	2x 18V 3Ah Li-Ion Batteries, charger, drywall nosepiece, wood nosepiece, storage bag & PH drive bit.

25mm - 75mm Collated screws

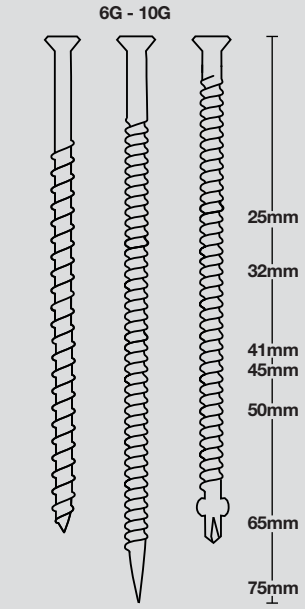

7 41474 09605 1

SENCO PC1010 COMPRESSOR

PC1010

PC1010

1 YEAR WARRANTY

FEATURES

- Soft grip handle
- Regulated pressure gauge
- Draws only 2 amps
- Ultra lightweight, only 9kg
- Tank pressure gauge
- Oil free pump design
- Quick disconnect 1/4 coupler

PRODUCT REFERENCE CHART

SPECS	PC1010
Tank	3.8 litre
Power	Electric
Weight	9kg
Horsepower	1.0 HP (Peak) 0.5 (Running)
Pump Type	Oil-less design
Air Displacement	34 L/min
Pump-Up Time	162 Seconds
Recovery Time	48 Seconds
Max Pressure	125psi
Sound Power	81dB LWA
BARCODE	8718035010896

8 718035 010896

Whitehose30

WHITEHOSE 30

DESCRIPTION
30 metre white hose complete with Nitto type fittings

Whitehose300

WHITEHOSE 300

DESCRIPTION
300 metre white hose bulk roll

PC101 Oil

PC0101 OIL

DESCRIPTION
Oil to suit Senco tools 236ml (MOQ12)

SENCO®

SENCO
CATALOGUE

FIRST EDITION

AIRCO® BRANDS

NEW SOUTH WALES Head Office
178-180 Adderley Street West,
Auburn, NSW 2144

VICTORIA
25 Logis Boulevarde,
Dandenong South, VIC 3175

QUEENSLAND
13 Gassman Drive,
Yatala, QLD 4207

SOUTH AUSTRALIA
1/2 E.W. Pitts Avenue,
Cavan, SA 5094

WESTERN AUSTRALIA
14 Alex Wood Drive,
Fooestdale, WA 6112

CONTACT DETAILS
Postal Address: PO Box 6598 Silverwater NSW 2128
Phone: 1300 365 800
Fax: 1300 365 888
Email: orders@aircobrands.com.au

© Copyright 2024 Airco Fasteners Pty LTD
ABN 94 068 705 699

OHS Management System . ISO 45001 Global-Mark.com.au®
Environmental Management . ISO14001 Global-Mark.com.au®
Quality Management . ISO 9001 Global-Mark.com.au®